CENTRAL STORE
58 Lunn Ave, Mt. Wellington, Auckland 1072
T 09 216 9533

NORTH SHORE STORE
36C Hillside Road, Glenfield, Auckland 0627
T 09 444 8811

SPECIFICATION SHEET

DIVA 1520/1655 Freestanding Bath

SKU: BTH-AR-6024MW DIVA

Material	Sanitary Grade Acrylic
Installation	Freestanding
Width	1520/1655mm
Depth	750/800mm
Height	600mm
Adjustable Feet	Yes
Waste Size	40mm
Overflow	Yes
Colour	White
Finish	Matte White
Size Options	**W**1520 or 1655mm

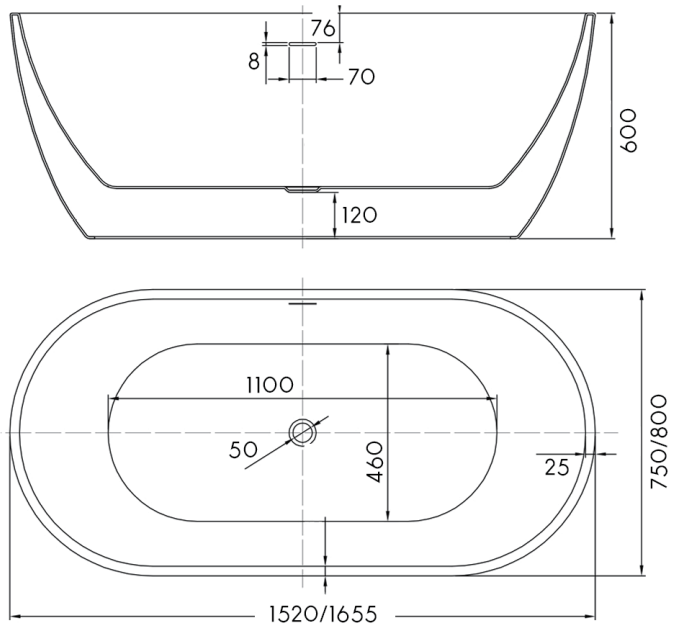

Acrylic Bath with Fiberglass Resin Backing

Double Wall Construction for Extra Insulation

Metal Support Frame

5 Year Warranty for Acrylic Bath

www.toptilebathrooms.co.nz

Dimensions are approximate.
Refer to www.toptilebathrooms.co.nz/warranty for full warranty details.

Perfect for You