TOPTILE & BATHROOM

NORTH SHORE STORE //
36C HILLSIDE ROAD, GLENFIELD, AUCKLAND
T 09 444 8811

CENTRAL STORE //
58 LUNN AVE, MT. WELLINGTON, AUCKLAND
T 09 216 9533

TOPTILEANDBATHROOM.CO.NZ

FACEBOOK.COM/TOPTILEANDBATHROOM

SPECIFICATION

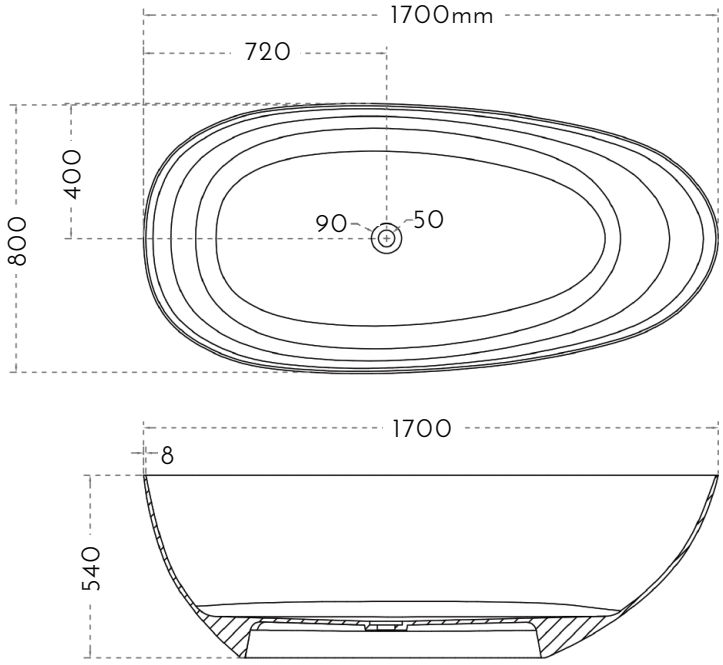

N.B. Drawings indicate the technical measurements only and is not a refelction of how the unit will look